KALFIRE
FIREPLACES

W66-48S

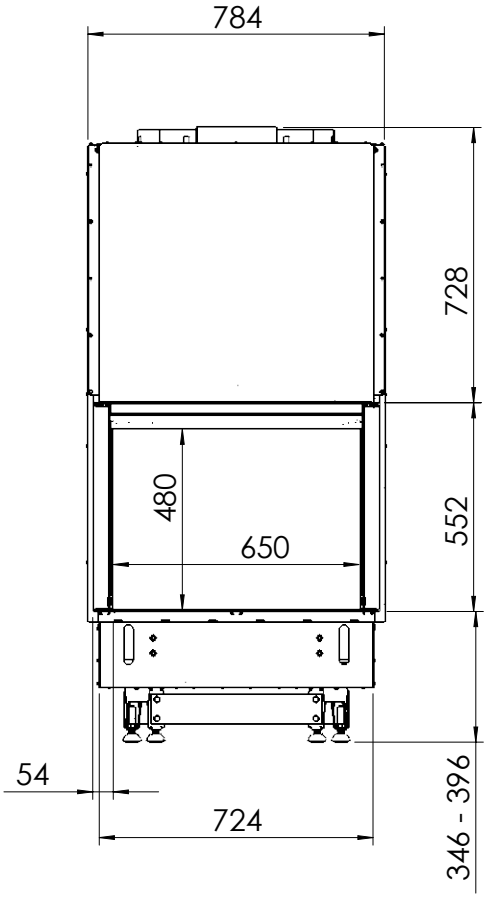

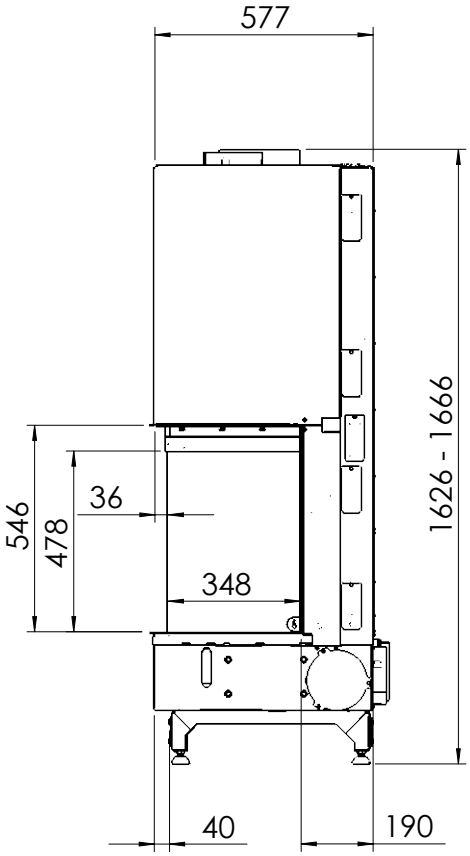

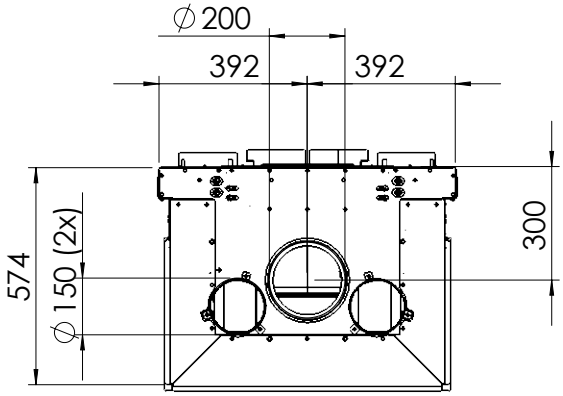

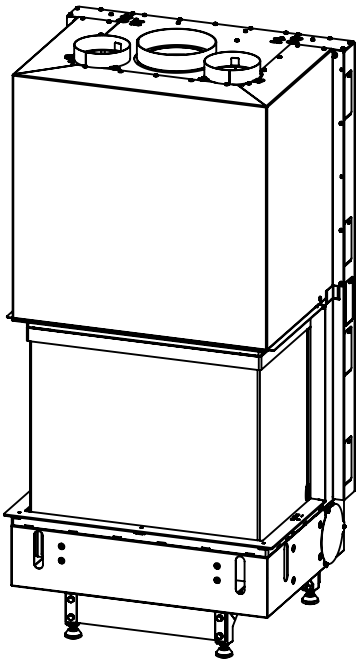

All dimensions in mm. Modifications under reserve. 19-4-2017 sheet 1 / 5

© All rights reserved. This drawing is sole property of Kal-fire. No part of this drawing may be reproduced, or published, in any form or in any way without prior written permission from Kal-fire.

KALFIRE
FIREPLACES

W66-48S

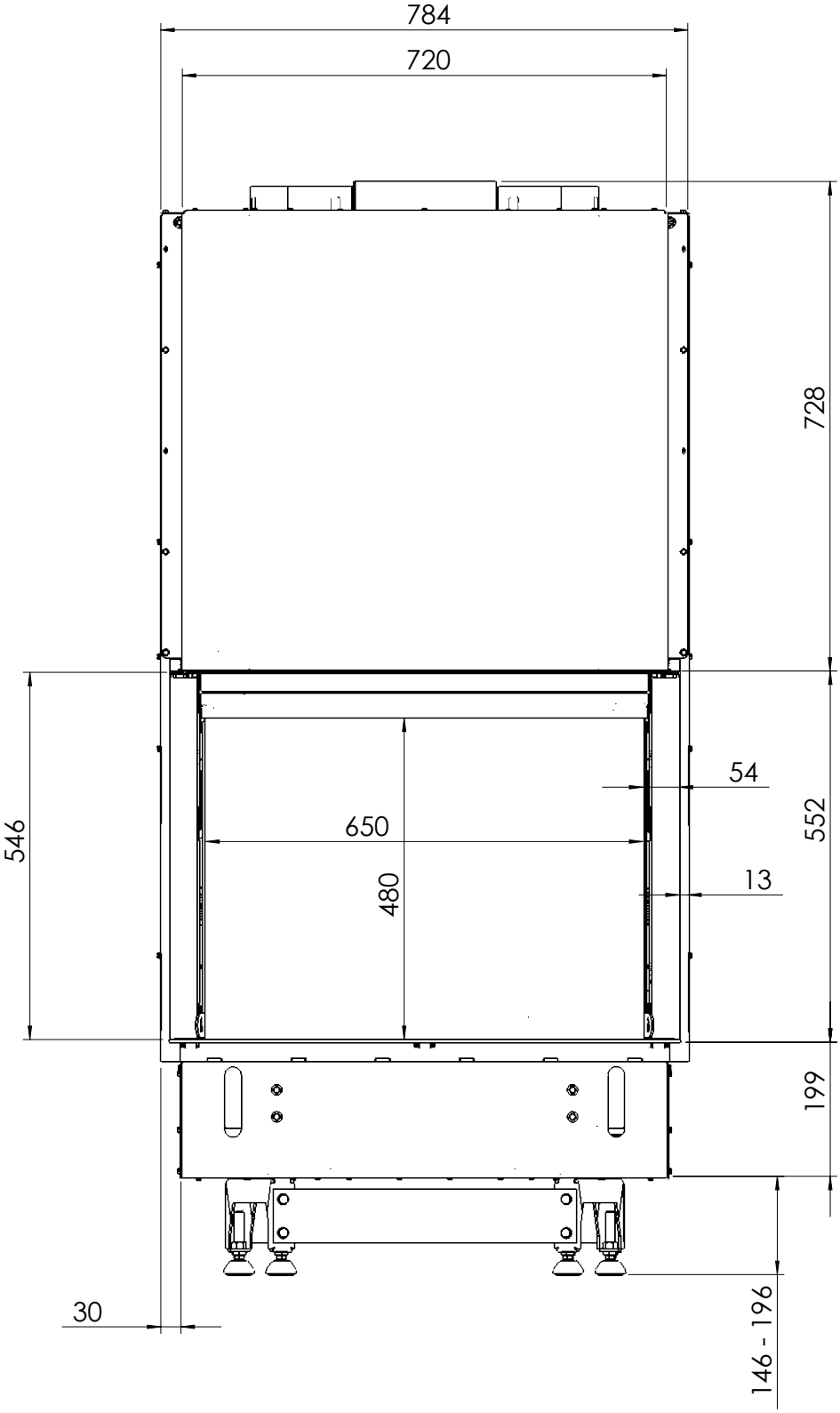

All dimensions in mm. Modifications under reserve.

19-4-2017 sheet 2 / 5

© All rights reserved. This drawing is sole property of Kal-fire. No part of this drawing may be reproduced, or published, in any form or in any way without prior written permission from Kal-fire.

KALFIRE
FIREPLACES

W66-48S

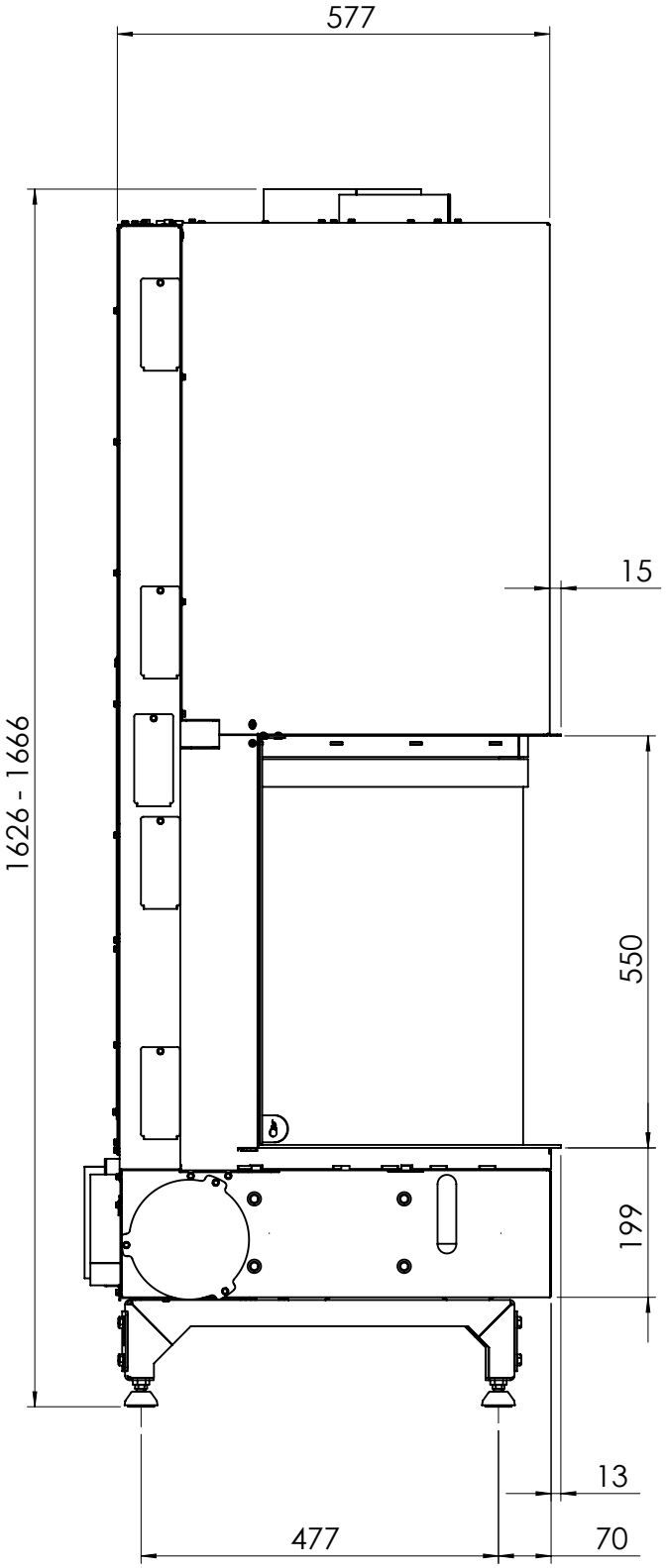

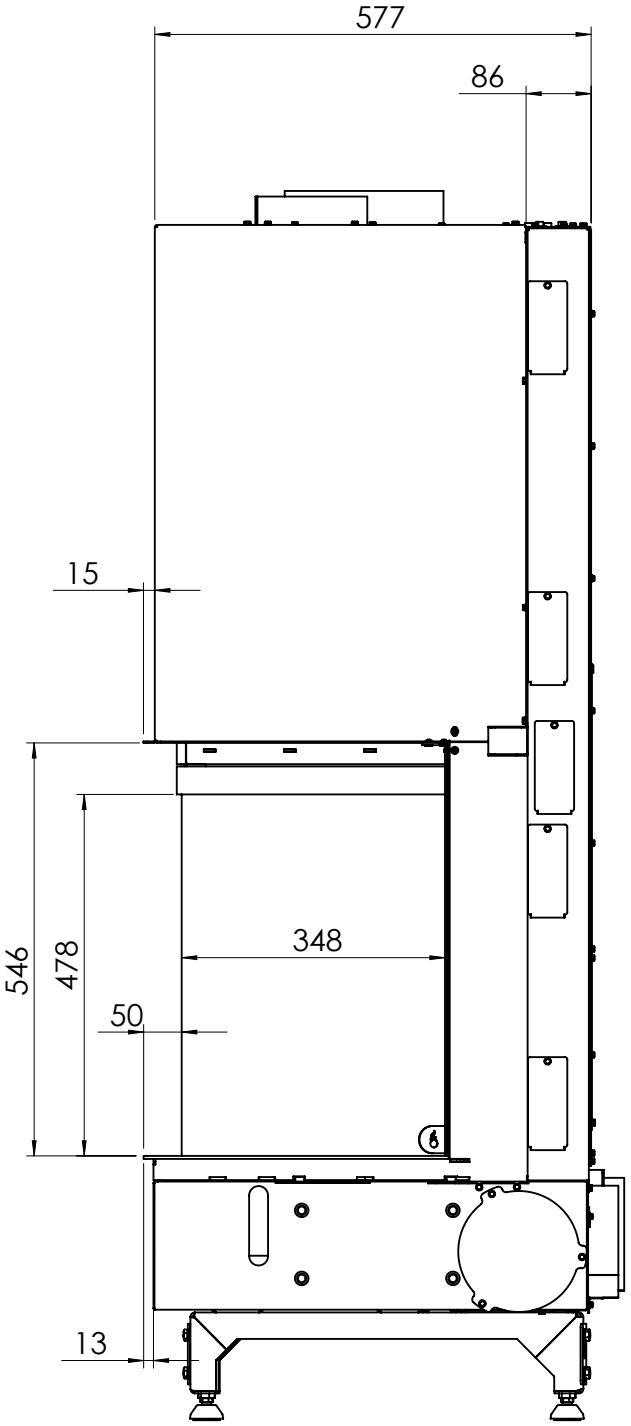

All dimensions in mm. Modifications under reserve. 19-4-2017 sheet 3 / 5

© All rights reserved. This drawing is sole property of Kal-fire. No part of this drawing may be reproduced, or published, in any form or in any way without prior written permission from Kal-fire.

KALFIRE
FIREPLACES

W66-48S

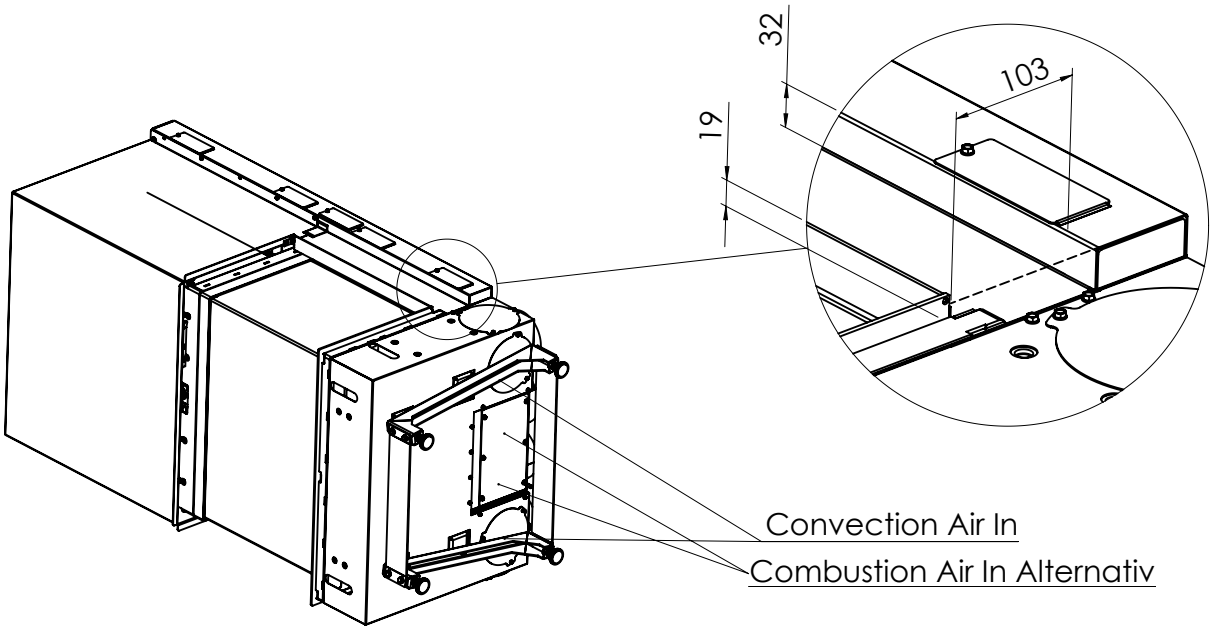

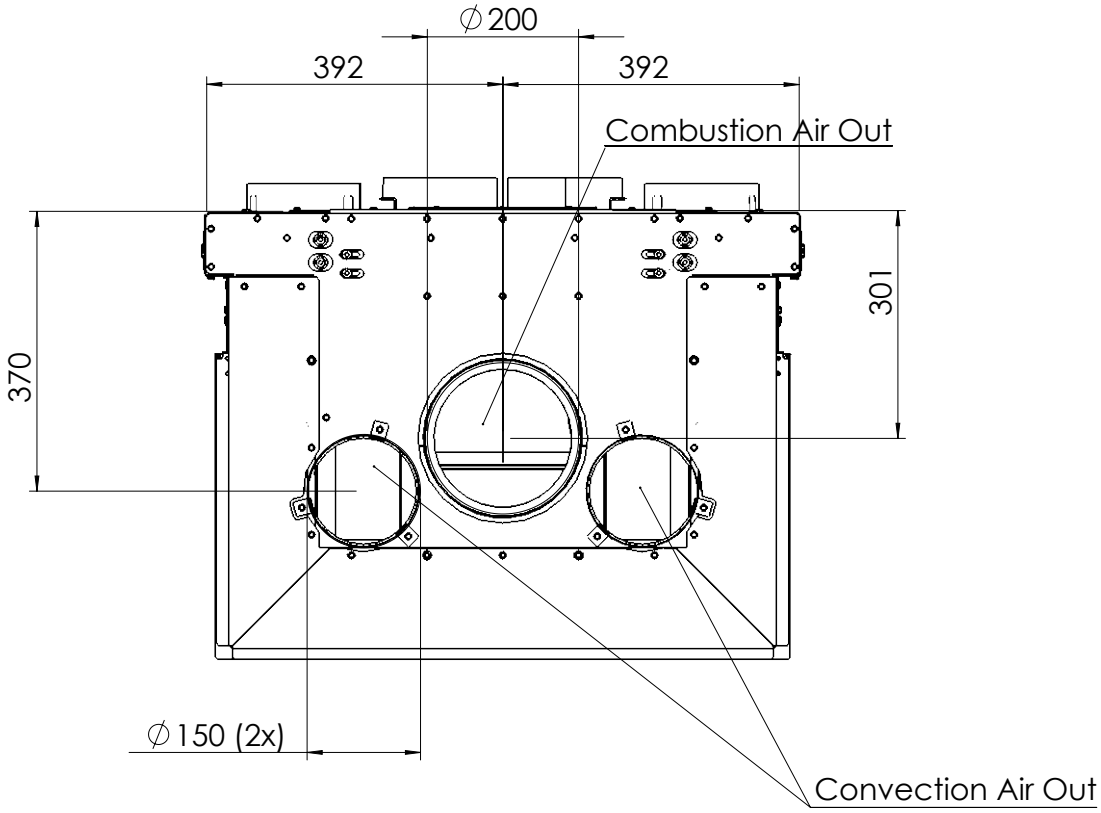

All dimensions in mm. Modifications under reserve.

19-4-2017 sheet 4 / 5

© All rights reserved. This drawing is sole property of Kal-fire. No part of this drawing may be reproduced, or published, in any form or in any way without prior written permission from Kal-fire.

KALFIRE
FIREPLACES

W66-48S

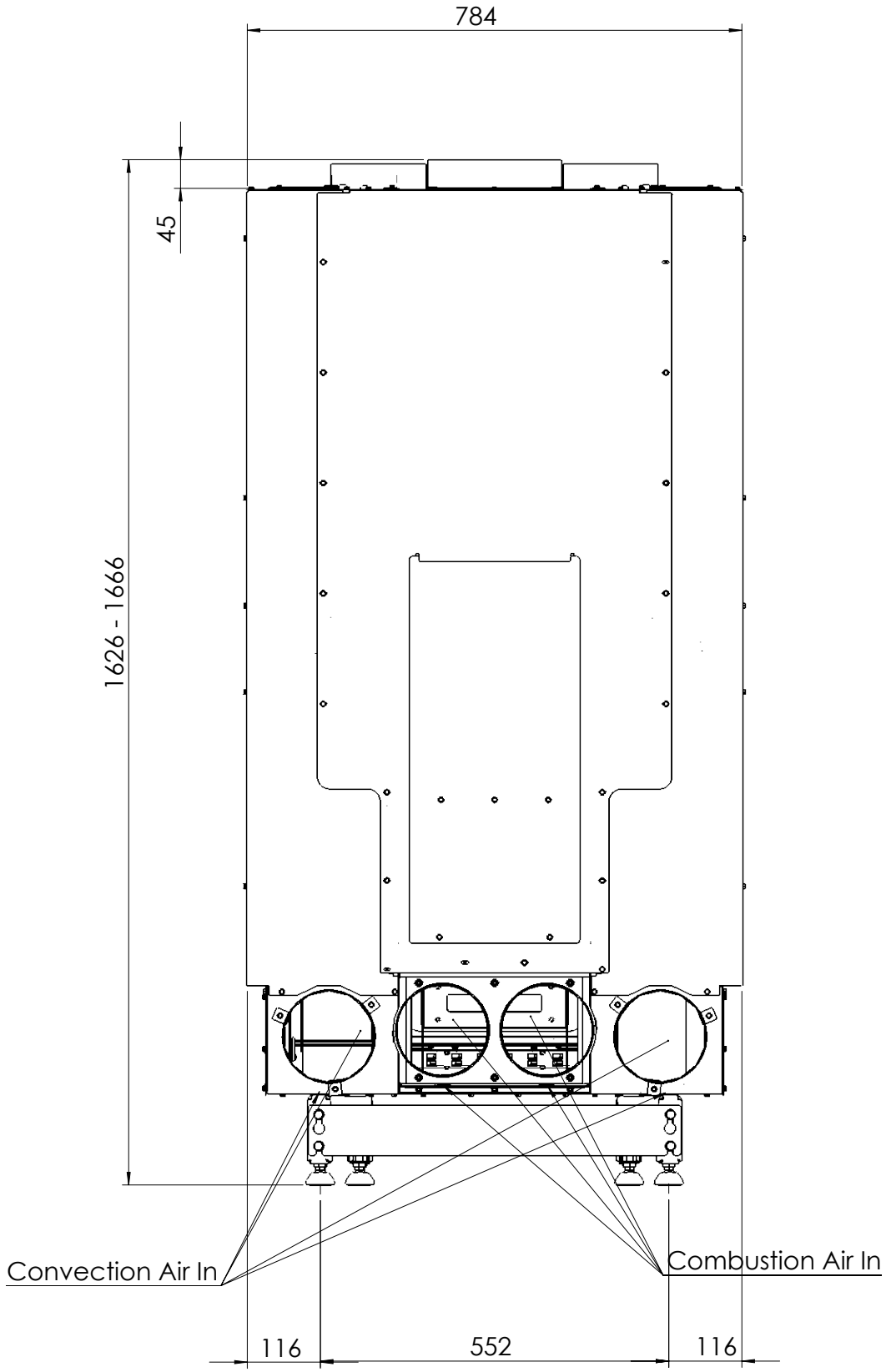

All dimensions in mm. Modifications under reserve.

19-4-2017 sheet 5 / 5

© All rights reserved. This drawing is sole property of Kal-fire. No part of this drawing may be reproduced, or published, in any form or in any way without prior written permission from Kal-fire.